22230 CCK/W33

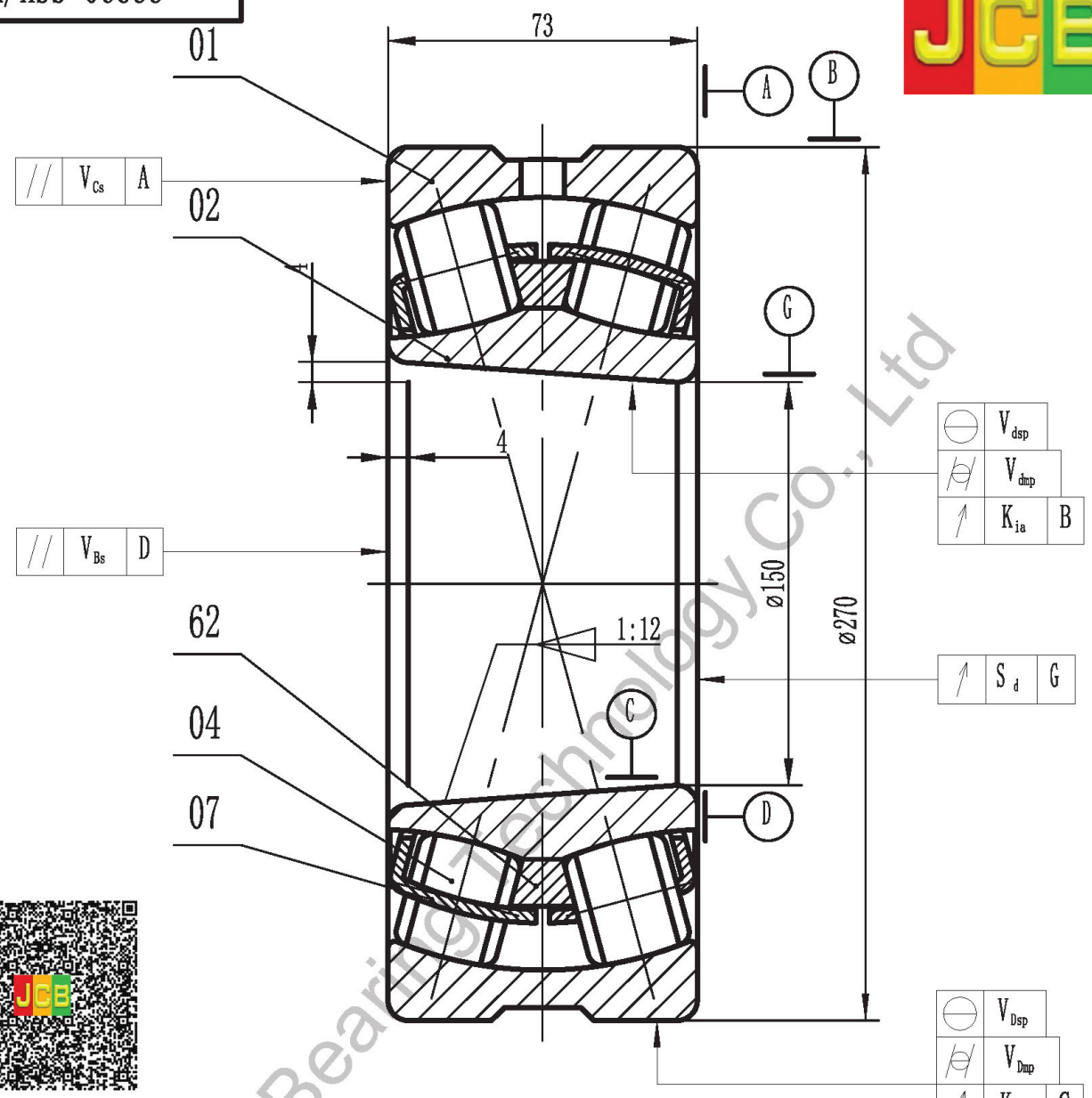

1. Tolerance of running accuracy are according to relevant state standard;
2. The value of the basic group of radial clearance:min *** max *** ;
3 Rated load: Cr= **** kN Cor= **** kN。

No.	Name	Qty	Material	Unit Weight (kg)	Total Weight (kg)	Remark
62	Guide ring		Steel 20—GB699			
07	Cage		Steel St 52-EN 10025:1990 + A:1993			
04	Roller		Steel 100Cr6—ISO 683-17:1999			
02	Inner ring		Steel 100Cr6—ISO 683-17:1999			
01	Outer ring		Steel 100Cr6—ISO 683-17:1999			

Luoyang JCB Bearing Technology Co., Ltd
Contact information
Company Address : No. 285, Fenghua road,
Luoyang, Henan, China.
Postal code : 471000
Phone :86-379-68611678
Fax : 86-379-68611679
E-mail: sales@jcb-bearing.com
Reserved E-mail: sales@sphericalrollerbearing.net
Website: www.jcb-bearing.com
www.sphericalrollerbearing.net

Spherical Roller Bearing

22230 CCK/W33

				Weight (kg)	Scale
S					———

Total page 6 | Page No. 1

Luoyang JCB Bearing Technology Co., Ltd

Luoyang JCB Bearing Technology Co., Ltd